September 28, 2010, 11:54 GMT

http://www.god-does-not-play-dice.net/ExplanatoryNote.pdf

LIGO is for the birds.
Do not ever say you knew nothing about it

Q: What is the difference between (i) the "expanding" metric, driven by some "dark" energy from "empty space", and (ii) the "expanding/collapsing" metric produced by a "passing" GW ?

A: In the second case, you have a **localized** source of GWs **in space**, and therefore LIGO can detect GWs as metric disturbances propagating **in space**, along an **z**-axis (details below).

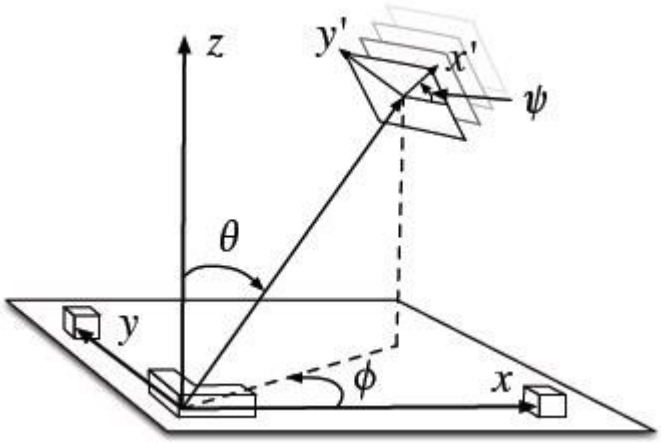

That's the crux of LIGO's problem: In GR, **any** observable of the gravitational "field" is *necessarily* quasi-local (Laszlo Szabados), hence the geodesics must be *quasi-local* as well. Let me try to explain the prerequisites for 'quasi-local' (details in Sec. Summary).

Thanks to Carl Friedrich Gauss, we can compute "space curvature" *intrinsically*, without bothering about *what* is curving *in what,* and *with respect to what.* But with so much "dark" stuff in GR, and given the fact that GR cannot define the topology of space, we should at least try to avoid the obvious errors from the Archimedean geometry of GR.

Imagine sea waves that ebb and flow on some (pre-existing background of) sand beach, thanks to which you can time their dynamics with your wristwatch. In cases (i) and (ii), some pre-existing background of "absolute space" (cf. Michal Chodorowski) is depicted with red circles in the four drawings below (click the images to download the source).

Absolute space is banned in GR, but is implied in case (ii). Why?

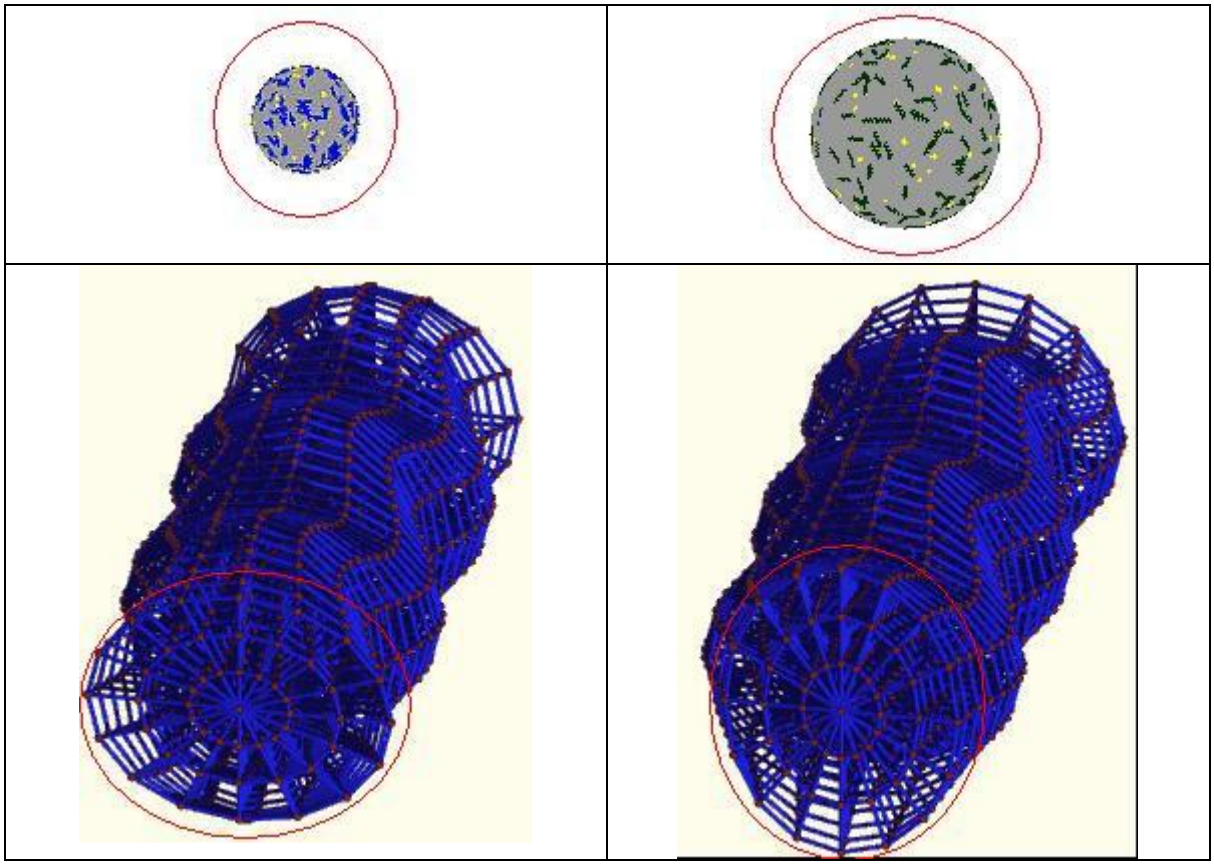

Why does LIGO "scientific" collaboration (LSC) treat the metric of spacetime differently, in cases (i) and (ii)?

The **z**-axis from the LSC drawing above matches the "expanding" radius of the balloon, as in case (i). It is orthogonal to the 3-D space, and to the x/y plane, in LSC case (ii). In this latter case, LSC need some "absolute space" and "absolute wristwatch" to *enable* the dynamics of GWs.

Forget it. There is no sense of wasting additional hundreds of million dollars and euro –-earned with hard labor by millions of people -- for the "enhanced" and "advanced" LIGO. It has been a dead turkey from the outset.

Notice that "absolute space" refers to "absolute structures" (James L. Anderson), which can show up in present-day GR only as gauge-dependent, hence unobservable, entities. Which is why Eddington concluded that the only speed of propagation relevant to them is "the speed of thought." (A.S. Eddington, The propagation of gravitational waves, *Proc. R. Soc. London*, Series A, 102, (1922) 268). Check out here for details on *emergent* geodesic waves, and my version of 'the quantum principle' here. Summary on GWs (dipole radiation) and quantum cosmology here.

NB: For those interested exclusively in the problems of LIGO "scientific" collaboration (LSC), I offer below an analogy with QM and QFT, and two articles and one monograph; more references in Sec. Summary.

Suppose one could "derive" some predictions from non-relativistic QM, which are total absurd in the framework of QFT. Then nobody could claim that the Schrödinger equation, which ignores quantum vacuum effects, is a legitimate approximation. Likewise, the 'spherical cow' approximation of GR (cf. Ch. 3, 'Generation of GWs in linearized theory', in [1]) is *initially inadequate* for treatment of energy transfer by GWs. Surely the linearized approximation of GR has justifiable applications, such as adjusting the GPS system, but any linearized treatment of GWs will **kill** the very effect LSC wish to observe, firstly, and secondly – it will offer **totally fake** "possibilities" that are total absurd in the framework of the full non-linear GR. Examples: the energy-momentum tensor and angular momentum of GWs (Secs 2.1.2 and 2.1.3 in [1]). These should be derived in a 'weak limit' from the *exact* solutions for GWs of the *full nonlinear* Einstein equations. However, to quote M. Maggiore ([1], footnote 19, p. 32):

> "In special cases one can find exact wave-like solutions of the full nonlinear Einstein equations, see, e.g. Misner, Thorne and Wheeler (1973), Section 35.9, and then there is no need to perform a separation between the background and the waves. However, it would be hopeless to look for exact solutions for the gravitational waves emitted by realistic astrophysical sources."

Voila, straight from the horse's mouth.

It is indeed hopeless to derive the "weak" limit from strong GWs. LIGO "scientific" collaboration are indeed doing parapsychology, by "acquiring" some "undisturbed background" and "direction" of GW propagation, and "separating" the "transverse-longitudinal and longitudinal-longitudinal components of h_{ij}, which, indeed, are pure gauge modes" from "the transverse-transverse **part**" of h_{ij}, which supposedly isn't (*ibid.*, p. 51).

Moreover, LIGO "scientific" collaboration ignore research articles by their colleagues; for example, Istvan Racz (cf. "tiny but isotropic change of the arm lengths", p. 12 in [2]) and Jose G. Pereira *et al.* [3].

To sum up, let me quote Bernard Schutz [4] (emphasis and comments added – D.C.):

"Energy is only conserved in situations where **external** forces (what are these 'external forces' in GR, I wonder – D.C.) are independent of time. For weak waves, it is possible to define their energy with reference to the "background" or undisturbed geometry, which *is there* **before** the wave arrives and **after** it passes (notice the fake "background", which requires in GR an 'absolute space' resembling 'pre-existing background of sand beach', in the sea-wave metaphor on p. 1 above – D.C.).

"But if the geometry is strongly distorted, the distinction between wave and background has little meaning. In such cases, physicists do not speak about waves. They only speak of the time-dependent geometry. But normally such regions are small, and **outside** of them the waves **take shape** as they move away."

LSC members have to define these 'regions of time-dependent geometry', and explain the null- and spatial infinity (cf. B. Schutz' talk from August 2002). All they need is blank notepads and sharp pencils, which I hope they can purchase with their personal savings.

D. Chakalov
September 26, 2010, 14:14 GMT

References

[1] Michele Maggiore, *Gravitational Waves*. Volume 1. Theory and Experiments. Oxford University Press, October 2007; sample pages here.

[2] Istvan Racz, Gravitational radiation and isotropic change of the spatial geometry, arXiv:0912.0128v1 [gr-qc]

[3] R. Aldrovandi, J. G. Pereira, Roldao da Rocha, K. H. Vu, Nonlinear Gravitational Waves: Their Form and Effects, arXiv:0809.2911v2 [gr-qc]

"The only we claim is that the energy and momentum are not transported away by linear, but by nonlinear waves.
....
"Even though the electromagnetic waves are linear, they do transport energy and momentum. There is no any inconsistency in this result because neither energy nor momentum are **sources** of electromagnetic field, and consequently the energy-momentum tensor does not appear explicitly in the electromagnetic field equation. (...) This means that the electromagnetic wave is unable to transport its **own source**, that is, electric charge. A linear gravitational wave is similarly unable to transport its own source, that is, energy and momentum. Only a **nonlinear** wave will be able to do it. This a subtle, but fundamental difference between electromagnetic and gravitational waves.
....
Observe that, even though electromagnetic waves are linear, they do transport energy and momentum. This is possible because neither energy nor momentum is source of the electromagnetic field. As such, the energy-momentum current does not enter the electromagnetic field equation, and consequently its linearity does not restrict the energy-momentum current to be linear. Differently from electromagnetic waves, however, in order to transport energy and momentum (the **source** of gravitation), a gravitational wave must **necessarily** be nonlinear."

(Comments: GWs have a **dual job**: to transport mass-energy while/during being produced by mass-energy. This unique non-linear and *self-acting* faculty, resembling Baron Munchausen, must **not** be "linearized" from the outset, because it encapsulates the crux of Einstein's GR: "the metric is treated as a field which not only affects, but also is (**at the same time** - D.C.) affected by, the other fields" (J. Baez). The so-called 'physicogeometric dualism' -- "the quantities g_{ni} have the dual meaning of field variables and the metric tensor of space-time" (V. Denisov and A. Logunov) – is depicted with the two hands in Escher's drawing. Yet any time we look at our wristwatch, we see the **final** result from an *already*-completed, and inherently non-linear, "negotiation" between the two sides of Einstein equation. Clearly, the true dynamics of GR is still to be uncovered; details here. D.C.)

[4] Bernard Schutz, *GRAVITY from the Ground Up*: An Introductory Guide to Gravity and General Relativity, Cambridge University Press, Cambridge, 2003, p. 317.

Some history (this is probably deeply boring; I include it here just 'for the record').

1. Five years ago, my manuscript "Are Gravitational Waves Directly Observable?" (196kb) was endorsed on Sat, 16 Jul 2005 08:15:16 -0400. The abstract (physics/0507133) was supposed to appear in the mailing scheduled to begin at 20:00 Monday US Eastern time (i.e., Tue 19 Jul 05 00:00:00 GMT). I got my User-ID for physics/0507133 and Password. On Monday, 18 July 2005, I tried to access my paper, but the password was changed. On the next day I emailed www-admin@arXiv.org, and finally got an auto-reply that my message has been received at their local time of Tue Jul 19 04:51:38 2005 (EDT). Finally, I wrote to arXiv-moderation on Tue, 19 Jul 2005 23:38:48 +0100, requesting explanation for the rejection of my paper, and on Tue, 19 Jul 2005 18:38:55 -0400 I was assured that my moderation query "has been received and will be given due consideration. Pending moderation queries are reviewed weekly. Further action is neither necessary nor helpful to speed up the process. (In particular, e-mail to any other addresses about moderation issues will be left unattended.) Thank you for your patience."

Regrettably, I haven't heard from arXiv Moderators. I suppose these people were Don Marolf <marolf@physics.ucsb.edu> and Matt Visser <matt.visser@mcs.vuw.ac.nz> , but there is no way for me to verify their identity. I leave this task to the future.

2. On Fri, 12 Oct 2007 15:14:09 +0100, I was branded as "just another crank" by Chris Isham, The Senior Dean, Professor of Theoretical Physics at Imperial College, London.

3. Since October 2009, I have made numerous requests for endorsement of my new manuscript "Taxpayer's Perspective on Gravitational Wave Astronomy" to gr-qc section of ArXiv.org server.

The incomplete list of 70+ theoretical physicists (Chris Isham included) who did *not* reply to my request, as well as two physicists who rejected it without even glancing at the manuscript, can be downloaded from

http://www.god-does-not-play-dice.net/!Endorsement.zip

The dark silence of physicists from U.S. National Science Foundation will also prolong the wasting of taxpayers' money by LIGO "scientific" collaboration. There is no sense in enhancing the "sensitivity" of what has been a dead turkey from the outset.

Check out the facts and arguments in the excerpts below.

Shame on you, LIGO "scientific" collaboration.

D. Chakalov <dchakalov@gmail.com>

19 July 2010

Kip's mantra

Excerpt from
http://www.god-does-not-play-dice.net/#mantra

The implications for "GW astronomy" are obvious: LIGO, Virgo, GEO, LCGT, LISA, *etc*., are supposed to detect the "ripples" of metric, as visualized below, in line with Kip's mantra:

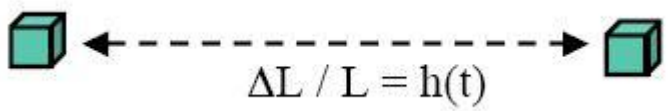

Notice that one space dimension is omitted in the animation below: it shows a 2-D plane (not 3-D space), which is being modulated by a passing GW, propagating along an axis **orthogonal** to that flat plane, yet the *very same* axis of GW propagation is supposed to match the "direction" of GW scattering in 3-D space **as well**. Which is why Kip Thorne and his colleagues suggested an L-shaped (x/y) "antenna" to catch the signal coming from the orthogonal (to that plane) **z** direction. Do you smell a rat?

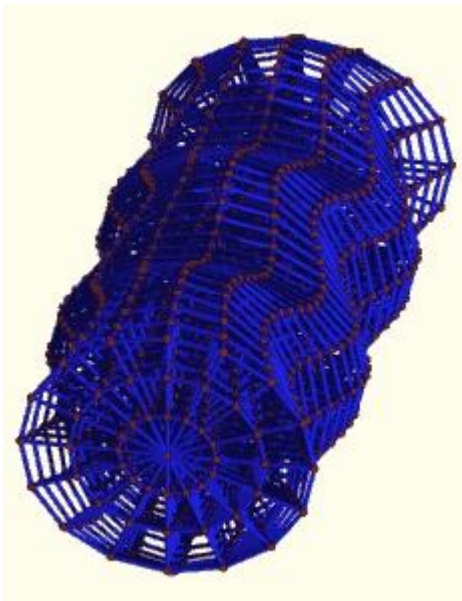

Markus Pössel, "The wave nature of simple gravitational waves",
Einstein Online, Vol. 2 (2006), 1008

Now, if we were 2-D Flatlanders, we'd introduce a "temporal" dimension to model our 2+1-D universe, but we would **not** like that "temporal" dimension to pertain to 'the whole 2-D Flatland *en bloc*', because it will point to some anti-relativistic aether, and any force from it will be totally "dark". Not surprisingly, Michal Chodorowski doesn't like some global Expansion of Space either [Ref. 4], yet the **global** "direction" of GW propagation, orthogonal to the 3-D space *en bloc*, is perfectly fine for LIGO Scientific Collaboration: they simply use an L-shaped (x/y) "antenna" and wait, patiently, for the GW strain to come from the orthogonal (to that plane) **z** direction. Isn't this GW parapsychology?

To make the case decipherable, recall the (utterly misleading) picture of "GW lake", in which the **two** spatial dimensions of the expanding/contracting plane in the animation above are omitted: you can imagine the GW lake below only by compactifying all "stretching 'n squeezing distances" on the 2-D plane into **one point** from the 1-D "radius" of the GW lake *below*. Notice that the 1-D "radius" is the alleged "longitudinal direction" of GW propagation (cf. Jose G. Pereira *et al.*).

You also need another "axis" [Ref. 4] for the **dimensionless** wave amplitude, and yet another axis to picture the GW lake in 3-D (to impress your taxpayers), which makes the picture below an utterly misleading muddle.

LIGO is supposed to be located "near the shore", where the lake is "effectively flat", so you can think of LIGO as some **point-like** fishing rod float waiting, patiently, for the (initially strong) GW from the lake center to wiggle it, **transverse** to the 1-D "radius" of the GW lake. But in order to picture the **transverse** (to the 1-D "radius") direction**s** of GW strain, you need to endow the **point-like** fishing rod float (LIGO) with two **spatial** dimensions, hence recover the 2-D plane in the animation above.

Total mess. For if you "upgrade" the **point-like** fishing rod float to 3-D space, where would the "longitudinal direction" point to? To "the center of the Galaxy"?

Let me quote Ray Weiss, from a video clip "Gravity: Making Waves", intended to the taxpayers who pay for all this mess (video transcript, American Museum of Natural History, November 2004).

Ray Weiss in lab, stretching and collapsing a mesh wine bottle protector:

"The waves can be represented by this object I found on a wine bottle. And it's a mesh that you can see. And the waves cause transverse to the direction in which they're moving. They're moving forward, and transverse to that the space gets **tugged** like this, and **collapses** like that. Tugged like this. And if you look carefully at this, and I'll do this a few times, you'll notice that the little squares in this, how they're exercising a motion where along one direction, it's obvious which direction -- I mean, the direction I'm pulling in -- space is getting **expanded**. But transverse to that, up and down, space is getting

contracted. And that's the key to the whole thing."

That's the key to the whole thing: you can't monitor some "expanding" [Ref. 4] or "collapsing" space if you are confined inside that same space: measurements "across" space are unphysical (B. Schutz, Fig. 24.3, p. 349).

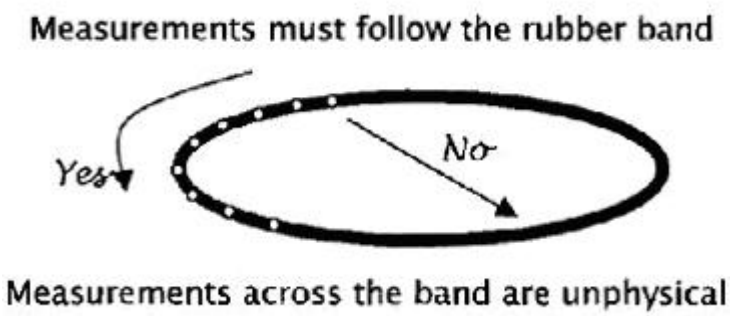

Fig. 24.3

However, B. Schutz and his colleagues from LIGO Scientific Collaboration (LSC) need exactly such measurements "across" 3-D space to determine the amplitude of the "passing" -- with respect to some absolute space [Ref. 4] -- GWs, and also "see" the animation above as ripples of the 3-D metric itself.

No **background** (regardless of being "undisturbed" or "disturbed") can exist for (i) "expansion" of 3-D space [Ref. 4] *nor* for (ii) GW propagation, yet Bernard Schutz and his LSC colleagues managed to "obtain" it for case (ii), with their spherical cow approximation.

There is also a tantalizing story by B. Schutz, regarding the "time parameter" of the propagation of GWs, depicted with the horizontal line in Fig. 22.1 below, from his book "GRAVITY from the Ground Up" (Cambridge University Press, Cambridge, 2003), p. 312. Notice also that the small vertical line refers to "something that is dimensionless" (exact quote from Kip Thorne's Physics 237-2002 Course).

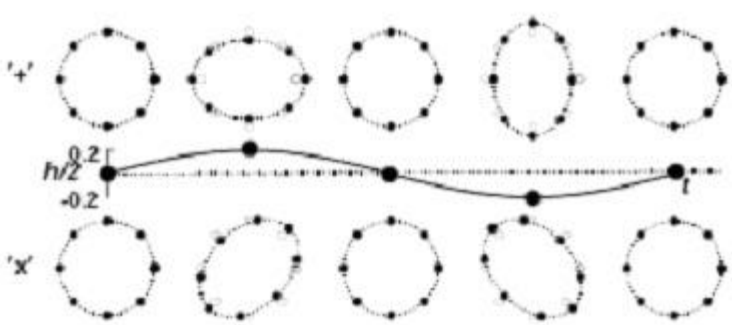

Fig. 22.1

B. Schutz argues that "the force of the Moon comes from the curvature of time" (*ibid.*, p. 310), and "the deformation produced by the Moon is partly directed towards the Moon (the longitudinal direction), whereas gravitational waves are transverse" (*ibid.*, p. 311).

Therefore, LSC members have to separate two crucially distinct cases: curvature of time, as in the example with the tidal effect on Earth caused by the Moon (no GWs in principle), from curvature of space, as in the case of time-dependent spatial curvature (lots of GWs waiting for the "advanced" LIGO and LISA), depicted with the horizontal line in Fig. 22.1 above, and denoted with **t** as well.

To elucidate the situation, let me quote further from B. Schutz: "The fact (there are no "facts" here - D.C.) that gravitational waves are transverse and do not act like the Moon does on Earth implies that they are not part of the curvature of time, since that is where the Newtonian forces originate. They are purely a part of the curvature of space (emphasis mine – D.C.). When gravitational waves move through a region they do not induce difference between the rates of nearby clocks. Instead, they deform proper distances according to the pattern in Fig. 22.1" (*ibid.*, p. 312). More from Bernard Schutz **here**.

Perhaps LSC members will try to separate (safely) the curvature of time from the curvature of space at GR19. I wish them best of luck with the SBG argument too.

In my "just-another-crank" opinion, the *splitting* of 3-D space into some **x/y plane** and an orthogonal "transverse direction" of GW scattering, denoted usually with **z** , is sheer parapsychology. Check out the recipe for detecting "**local** perturbations in the space-time metric from astrophysical sources", by LIGO Scientific Collaboration (540 people), arXiv:1007.3973v1 [gr-qc], p. 11:

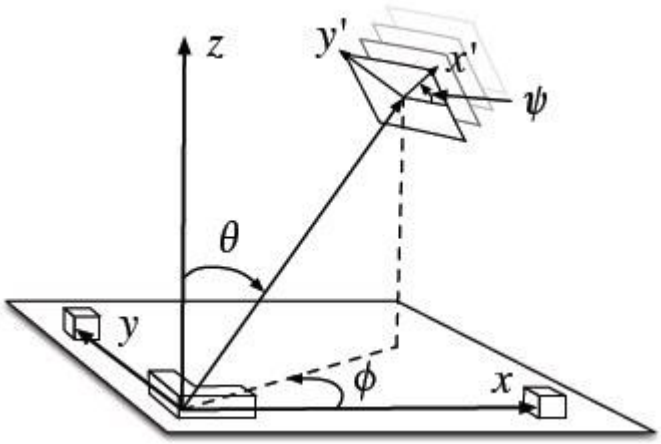

NB: If someone tells you that the **ongoing** "expansion" of spacetime metric, driven by [we-do-not-know-it], is along a straight line **in space** (say, 'from the center of the Galaxy toward Earth'; cf. my email to Gabriela González from 8 June 2005), would you believe it? Of course not. Then how come people believe in the drawing above? Can you separate the "expanding" metric in the two cases?

Notice also the dimensionless GW amplitude and the analogy with the EM waves in 3-D space, offered by Bernard Schutz: you can prove that light is a transverse wave by using Polaroid, hence a simple Gedankenexperiment with GW "amplitude" will require that it will inevitably acquire dimensionality, upon projecting the "amplitude" on the transverse **x/y** plane.

The proper GW detectors should be endowed with the faculty of self-acting (resembling the human brain), in order to be triggered by GWs. But this is a different thread.

Here comes a difficult (to my teenage daughter) exercise: try to recover the ripples of the 3-D metric following the 1-D case (see the GW lake) and 2-D case (the Flatland animation above).

If you endow the "stretching 'n squeezing" 2-D plane (Ray Weiss' mesh) with a third space dimension, the "direction" of GW propagation will be **omnipresent** in 3-D space, similar to the 2-D case in which it was "acting" on the whole 2-D plane *en bloc*. To explain 'omnipresent', imagine a brand new axis in 3-D space, along which you can discriminate between Small and Large. The spherically symmetrical 3-D "breathing" of the metric is along this new T-invariant axis, so if you dare to talk about the dynamics of the metric-filed "breathing", you have to use different signs for **t** , say, **+t** for the "inhaling" mode and **-t** for the "exhaling" mode. Then the arrow of spacetime will require **another** axis, denoted with **w** in Fig. 2 above, which is **orthogonal** to the *omnipresent* axis of the Small viz Large in our good old 3-D space.

Thus, the cosmological arrow [Ref. 4], as well as the dynamics of GW scattering in 3-D space, can only be defined w.r.t. the unobservable, global, Heraclitean, and non-Archimedean time (see above): once we "look" at 3-D space from the *global mode*, the very **nature** of time changes accordingly. As explained in Wiki, we would see "all points in 3-dimensional space **simultaneously**, including the inner structure of solid objects and things obscured from our three-dimensional viewpoint". However, our (inanimate) wristwatch can read only *one* instant from this *global mode* of time. It can't read **+t** ("inhaling" mode) and **-t** ("exhaling" mode) *simultaneously*, hence it will report the global mode of time as "*a*temporal" and "frozen" (recall the problem of time in canonical quantum gravity).

I bet nobody at GR19 will make the slightest effort to mention the unobservable, global, Heraclitean, and non-Archimedean time, pertaining to GWs *and* the global expansion of space. Eight years ago, B. Schutz explained only a fraction of the problems, and didn't even mention the problems of GW dynamics stemming from the global expansion of space: you **cannot** detect GWs along the time read by your wristwatch, as Kip Thorne speculated above, just as you cannot take the stand of some meta-observer to monitor the global GW dynamics 'on the whole spacetime *en bloc*', or count to infinity, like Chuck Norris.

The usual excuse of LIGO Scientific Collaboration is that they use a linearized approximation of GR, only this 'spherical cow' is "**a shadow without power**" -- check out Hermann Weyl.

Yet LSC persistently ignore all arguments against the "theory" of GW detection with LIGO and the like. Okay, I used *their* linearized approximation of GR to derive the conditions under which LIGO Scientific Collaboration (700+ people) might succeed: LIGO needs a *schizophrenic behavior of gravity*, as explained **here**. But of course nobody at GR19 will mention Hermann Weyl nor the SBG argument.

NB: LIGO Scientific Collaboration stubbornly refuse to acknowledge that there are no bans on the dipole radiation anymore, simply because the alleged conservation of gravitational mass-energy and momentum, in a world dominated by an *evolving* cosmological "constant", is a wishful thinking: all the energy conditions of GR have come into question.

In October last year, I asked 75 physicists to endorse the submission of my manuscript "Taxpayer's perspective on GW astronomy" to ArXiv.org server. Two of them refused (Jonathan Thornburg and Stanley Deser), while the rest didn't even bother to respond to my email. Surely GWs exist, but we may have to construct brand new detectors for the dipole radiation, and even re-examine the crux of GR [Ref. 5]: the quasi-local energy density of the gravitational field and the "boundary conditions" [Ref. 6] fixed in the global non-Archimedean spacetime. In simple words, the *wegtransformierbar* quality of gravity "over a point" (Afriat and Caccese, p. 27) indicates its *specific* quantum origin; details above.

Nobody from GR19 has so far responded to my email. I cannot argue with silent spherical cows either, once they have collected all the money -- taxpayers' money -- to play with Einstein's GR.

There is no sense to "enhance" the sensitivity of LIGO, for it has been a dead turkey from the outset. I suggested in March 2006 that LIGO tunnels should be converted to wine cellars, but what can be done with LISA? How much will cost that space junk?

When is enough, enough?

"just another crank" D.C.
June 1, 2010
Last update: July 29, 2010

... "something that is dimensionless" (exact quote from Kip Thorne)

Excerpt from
http://www.god-does-not-play-dice.net/#Jones

Recently, a young theoretical physicist, Gareth Jones, defended his Ph.D. Thesis on "Searching for gravitational waves... ". He looked at Ch. 23 from Jim Hartle's textbook, "Gravity, an introduction to Einstein's General Relativity", to eventually understand the dimension**less** GW amplitude (Eq. 1.64, p. 15) that would "cause a periodic strain (i.e., stretching and contraction) of the proper distance between points (Sic! - D.C.) in spacetime" (*ibid*., p. 182).

But you can't hide the *dimensionality* of GW amplitude in 3-D space: check out SBG here. In order to prove LSC (at least **679** people) **wrong**, all you need is to drive the "background" in the linearized approximation of GR to its absurdity, as with the SBG argument. Not sure?

Please explain the *dimensionality* of GW amplitude (h) in Kip's mantra:

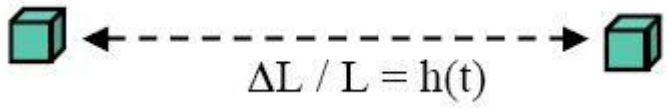

Something with [meter] maybe? Or some "creative analogies" from EM radiation?

If you look at Wiki, GW amplitude "is not the quantity which would be analogous to what is usually called the amplitude of an electromagnetic wave (...)."

The alleged GW has frequency, wavelength, and speed -- all defined with proper dimensionality. Only the *action* of geometry on matter, embodied in the mantra above, is a dimensionless **ghost** that shows up only with ... "2.3×10^{-26}" , say.

How can Gareth Jones change his Ph.D. brain, to think as a physicist? Surely the entity that fixes a 'meter' cannot itself be defined with what it *produces* -- a 'meter'. Can he notice the intrinsic parapsychology of statements like "our best (lowest) upper limit on gravitational wave amplitude is 2.3×10^{-26}" ?

I think Jim Hartle (along with Bernie Schutz) should be blamed for Gareth Jones' professional career. It may be wasted by chasing ghosts with real, taxpayers' money.

In my opinion, the "dimensionality" of GW amplitude is just like that of quantum waves. And just like the de Broglie waves (cf. Franco Selleri above), in present-day GR these GWs cannot show up either, simply because they cannot transport energy-momentum to any physical system in the spacetime of GR textbooks.

Neither quantum waves (recall the quantum vacuum) nor gravitational waves are "empty" by themselves. Pity nobody cares.

D.C.
February 10, 2010
Last update: March 17, 2010

Bernard F. Schutz, Mathematical and Physical Perspectives on Gravitational Radiation, August 2, 2002

Excerpt from
http://www.god-does-not-play-dice.net/#note_6

(no comment)

Snapshot at 00:04:20 from video.wmv (156 MB)

p. 1: "Equivalence principle implies no *local* definition possible in any situation: must attempt "regional" definition in regions at least as large as a wave-length.

p. 9:
From a physical point of view, null infinity is *very* far away. A measure of how far one has to get from a source to be "near" infinity is to consider the divergence of the true curved-space light-cones from their flat-space approximations, which wind up at spatial infinity. Martin Walker first pointed out the enormous distance required to separate these cones by just one wavelength or period of the gravitational wave, a reasonable length scale for a radiation problem. The separation is something like $2M\ln(r/M)$. Setting this equal to λ for the Hulse-Taylor pulsar, we solve for r and find that it is a bit more than 10^{10^9} km! This is unimaginably bigger than the observable Universe, whose radius is a mere 10^{23} km.

p. 10: "A more elegant and potentially powerful scheme is to incorporate conformal techniques to bring null infinity to a finite point on the grid (emphasis added - D.C.), then can incorporate infinity into the computational domain (Friedrich, Husa, Lechner, Frauendiener all attending this meeting)."

Spherical cows

Excerpt from
http://www.god-does-not-play-dice.net/#Gray

Subject: Spherical cows
Date: Wed, 12 May 2010 14:42:46 +0300
From: Dimi Chakalov <dchakalov@gmail.com>
To: Richard Gray <richard.gray@telegraph.co.uk>
Cc: Jim Hough <J.Hough@physics.gla.ac.uk>,
Sheila Rowan <S.Rowan@physics.gla.ac.uk>,
Ralph Cordey <Ralph.Cordey@astrium.eads.net>,
Keith Mason <keith.mason@stfc.ac.uk>,
council@stfc.ac.uk
Bcc: [snip]

RE: Largest scientific instrument ever built to prove Einstein's theory of general relativity, by Richard Gray. The Daily Telegraph, 8:30 AM BST, 09 May 2010,
http://www.telegraph.co.uk/science/space/7695994/Largest-scientific-instrument-ever-built-to-prove-Einsteins-theory-of-general-relativity.html

Dear Mr. Gray,

I trust you are familiar with the anecdotal story about a 'spherical cow',

http://en.wikipedia.org/wiki/Spherical_cow

Suppose someone claims that *the real cows are indeed round*, because cows might be approximated as spherical objects, and then ask your government to allocate a significant portion from your taxes for detecting the unique pattern of 'real spherical cows'.

Likewise, you were told by a number of people that, after applying their spherical-cow approximation to Einstein's theory of general relativity, they might eventually detect gravitational waves (GWs): "we haven't been able to detect them yet because they are very weak" (Jim Hough).

However, their persistent optimism is rooted on artifacts due to their spherical-cow (=linearized) approximation of GR,

http://www.god-does-not-play-dice.net/Szabados.html#SBG

I fact, they ignore all problems due to their approximation. For example, Hermann Weyl proved in **1944** that such spherical-cow approximation implies the existence of a tensor that, except for the trivial case of being precisely zero, does not otherwise exist,

http://www.sjcrothers.plasmaresources.com/weyl-1.pdf

Regarding Ralph Cordey at Astrium UK and the so-called LISA Pathfinder: How much this spherical cow will cost to UK taxpayers, I wonder.

Yours sincerely,

Dimi Chakalov
35 Sutherland St
SW1V 4JU

Note: The failures to detect GWs were "explained" by Jim Hough with a *very* misleading statement: "we haven't been able to detect them yet because they are very weak". In fact, GWs are immensely powerful phenomena, but nobody -- Jim Hough and Sheila Rowan included -- can offer a non-linear theory of GWs. All they can do is to imagine that, by the time GWs reach LIGO or LISA, they will be "very weak", such that their spherical-cow approximation to Einstein's GR would be correct.

But again, they don't have any non-linear theory of strong GWs, from which some "weak limit" can be derived.

All they do is asking for more taxpayers' money for detecting spherical cows, instead of doing their homework first on paper, to demonstrate such "weak limit" to initially strong GWs. Pity nobody cares.

D.C.
May 12, 2010

How LIGO might succeed: Schizophrenic Behavior of Gravity

Excerpt from
http://www.god-does-not-play-dice.net/Szabados.html#SBG

The schizophrenic behavior of gravity (SBG), which is needed for LIGO to achieve its goal, refers to some *shielding* (and also metronome-like) mechanism denoted with **/** , which separates the two "polarizations" , denoted with + and x , in such fashion that the sequence

+ / x / + / x / + / x / + / x / + / x / + / x / , ...

will have a frequency of **N** cycles of [**+ / x /**] per second, as recorded by the wristwatch of LIGO's operator, reading **h(t)** (see below).

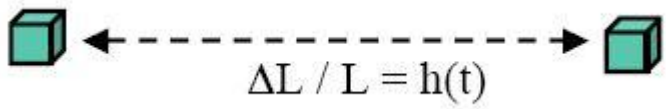

This wristwatch is supposed to read simultaneously the dynamics of the two "waveforms" ("each polarization has its **own** gravitational-wave field", says Kip Thorne), encoded with the mysterious **h(t)** above, which pertains to the two (presumably) independent "polarizations": see the slide below, from Kip Thorne's lecture in January 2001.

And by the way, what is the dimensionality of the GW amplitude projected on the **x/y** plane below ?

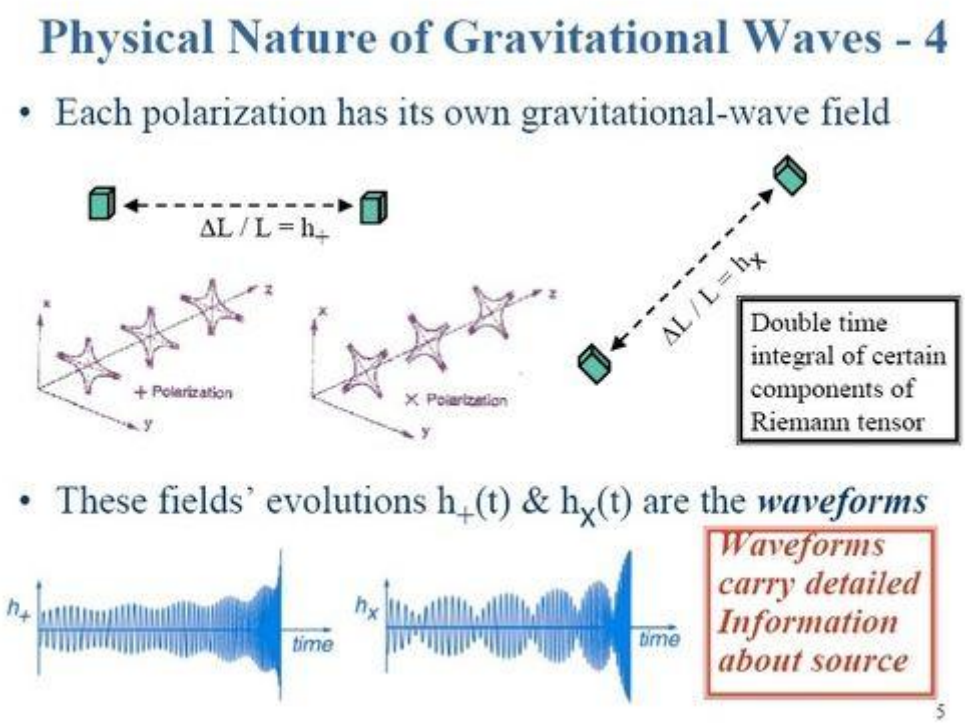

Without some *exact metronome-like shielding mechanism* (totally absent in the slide above) separating the two gravitational-wave fields, the two "polarizations" will inevitably interfere along their common **h(t)** read by the wristwatch of LIGO's operator, and it is totally unclear what might happen to LIGO's arms, as they may, for example, be simultaneously stretched and squeezed by the **+** polarization, and squeezed and stretched by the **x** polarization.[1]

As of today, all members of LIGO Scientific Collaboration (LSC) -- a self-governing collaboration[2] seeking to detect gravitational waves, currently made up over 600 members from over 50 institutions and 11 countries -- deeply believe that such *shielding* mechanism exists in Nature.

I disagree, and refer to LSC as 'Jehovah's Witnesses of GW astronomy'. But instead of

repeating the rigorous proofs by Angelo Loinger that in the **full non-linear** GR the project undertaken by LSC is an absurd (see also Jose G. Pereira *et al*.), I opted for the linearized approximation itself, to show the dead end of their project by ***reductio ad absurdum***.

Surely GWs exist, but if the GW detector doesn't have access to the reference fluid of GR, it cannot in principle "sense" the displacement of spacetime itself, relative to *the reference fluid*. The latter cannot be unveiled in the current GR, and because we still don't have proper quantum gravity, all we can say today is that "if we displace a mass, its gravitational field and the related curvature of the interested manifold *displace themselves along with the mass*." (A. Loinger, physics/0506024 v2, pp. 2-3)

Moreover, GW detectors should be designed on the basis of the *non-linear* mechanism by which GWs carry energy (Hermann Bondi), provided one can describe *smooth bi-directional transitions* between *very* strong GWs and *very* weak GWs (here Josh Goldberg is keeping quiet), while LSC members use linearized approximation with some fictional "background" (B. Schutz), which produces ridiculous **artifacts** (*e.g.*, the **h(t)** above). Of course, these artifacts were not detected during all five LIGO "runs", and will not be detected with the forthcoming S6 "run" in 2009 either.

Recall that Russell Hulse and Joseph Taylor were *very* lucky to discover the binary system PSR1913+16, in which one of the stars was a pulsar with period of orbit just eight hours -- extremely small by astrophysical standards -- hence they used it as a **clock**, and speculated further that the change in the period corresponded to the rate by which the binary system were (supposedly) losing energy. Then Hulse and Taylor decided to explain the inferred loss of energy with "GW emission".

Namely, they applied the old Tanzanian saying: "How do we know that Father Christmas has a beard? We know it, because snow falls when he shakes his beard." But again, the rate of the "snowfall" was *the only* evidence in support of their wild guess, and it can be explained without invoking "GW emission" (*e.g.*, Davor Palle and Fred Cooperstock).

However, in the case of LIGO and the like, LSC members will have to find a brand new system that can provide precise *shielding* and metronome-like mechanism, as explained above.

LIGO and PSR1913+16 are **incomparable**[3]. Forget it.

Yes, GWs exist, but cannot be detected with LIGO.

What is the price tag of the "advanced" LIGO? Should we allow LSC to produce more space junk with the three LISA satellites and waste **billions** of taxpayers' money?

I raised my voice six years ago, on Wed, 19 Feb 2003, but have not yet received *any* professional response from any LSC member, nor from their **staunch supporters** at the National Science Foundation and Astro2010 Survey Committee. They either ignore my email messages or respond with "remove my name from your email lists" (Clifford Will and Joan Centrella).

All LSC members have professional knowledge and expertise in gravitational physics, and all of them should be **perfectly aware** that LIGO is for the birds. Yet they keep quiet and ask for more money earned with hard labor by millions of people.

Shame on you LIGO "scientific" collaboration.

D. Chakalov
March 28, 2009
Last update: September 28, 2010
---

[1] Notice that the wristwatch of LIGO's operator is supposed to read the "response" h(**t**), which is "only a certain linear combination" of the two "polarizations", but without some metronome-like *shielding* mechanism the two "polarizations" will conflate and intermingle: see Eq. 1.3 below (reference here).

Gravitational waves are described by a second rank tensor $h_{\alpha\beta}$, which, in a suitable coordinate system and gauge, has only two independent components h_+ and $h_\times$, $h_{xx} = -h_{yy} = h_+$, $h_{xy} = h_{yx} = h_\times$, all other components being zero. A detector measures only a certain linear combination of the two components, called the response $h(t)$ given by

$$h(t) = F_+(\theta, \varphi, \psi)h_+(t) + F_\times(\theta, \varphi, \psi)h_\times(t), \qquad (1.3)$$

where F_+ and $F_\times$ are the detector antenna pattern functions, ψ is the polarization angle, and (θ, φ) are angles describing the location of the source on the sky.

Back in 1999, Bernard Schutz (emphasis added) speculated extensively about the *dimensionless* amplitude of the wave "projected on the detector (a projection of the two polarizations h+ and h×)", and predicted that in "a few years, perhaps as little as 2, perhaps as many as 8 (in the year 2007 - D.C.), we will start to make observations of gravitational radiation from astrophysical sources. (...) It will be an exciting time!"

Bernard F Schutz, Franco Ricci, Gravitational Waves, Sources, and Detectors, arXiv:1005.4735v1 [gr-qc]; "Comments: 82 pages, 9 figures, lecture notes from 1999, not posted to ArXiV at the time because they exceeded the article/figure size limits"

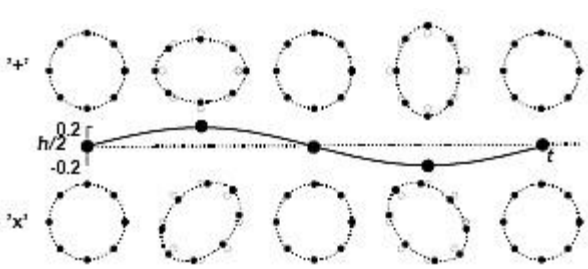

Figure 1.1. Illustration of two linear polarizations and the associated wave amplitude.

"2.1 Gravitational wave observables

"Here are the things that we want to measure when we detect gravitational waves:

• h+(t), h×(t), phase(t): the amplitude and polarization of the wave, and the phase of polarization, as functions of time. These contain most of the information about gravitational wave.
....
"Let us consider now what we can infer from a detection. If the gravitational wave has a short duration, of the order of the sampling time of the signal stream, then each detector will usually give just a single number, which is the amplitude of the wave projected on the detector (a projection of the two polarizations h+ and h×).

"If the wave lasts more than one sampling time, then this information is a function of time.
....
"6.3 Conclusion

p. 70: "In a few years, perhaps as little as 2, perhaps as many as 8, we will start to make observations of gravitational radiation from astrophysical sources. (...) It will be an exciting time!"

L.S. Finn, N. Cornish, V. Faraoni, and C. Corda are keeping dead quiet, as if they were unaware of the SBG argument above.

The alleged "polarization" of GWs was explained by C. Will as follows (6.2 Polarization of gravitational waves):

"A laser interferometric or resonant bar gravitational wave detector measures the **local components** of a symmetric 3 x 3 tensor which is composed of the "electric" components of the Riemann curvature tensor, [XXX], via the equation of geodesic deviation, given for a pair of freely falling particles by [XXX], where [XXX] denotes the spatial separation.

"In general there are six independent components, which can be expressed in terms of polarizations (modes with specific transformation properties under rotations and boosts). Three are transverse to the direction of propagation, with two representing quadrupolar deformations and one representing a monopole "breathing" deformation. Three modes are longitudinal, with one an axially symmetric stretching mode in the propagation direction, and one quadrupolar mode in each of the two orthogonal planes containing the propagation direction.
...
"Figure 9 shows the displacements induced on a ring of freely falling test particles by each of these modes. General relativity predicts only the first two transverse quadrupolar modes (a) and (b) independently of the source; these correspond to the waveforms $\mathbf{h_+}$ and $\mathbf{h_x}$ discussed earlier (note the cos[phi] and sin[phi] dependences of the displacements)."

The missing element in this picture is some metronome-like *shielding* mechanism, which would prevent the two "polarizations" to conflate and intermingle, along with the **longitudinal modes** (J. G. Pereira *et al.*). In addition to these inherent problems of the "transverse" direction of GW strain, the alleged "longitudinal" direction of GW

propagation cannot be demonstrated in 3-D space either: check out a simple Gedankenexperiment with the phase of GWs and the *dimensionality* of their "amplitude" here. These two simple examples comply with the linearization approximation of GR and demonstrate the absurdity of LSC project.

Besides, as two prominent pupils of Kip Thone, E. Flanagan and S. Hughes, acknowledged in their gr-qc/0501041v3, p. 12 (emphasis added), the important variables that "have the advantage of being gauge invariant" have "the disadvantage of being non-local". Computation of "these variables at a point requires knowledge of the metric perturbation h_{ab} **everywhere**."

In the case of LIGO (cf. Eq 3.13), "many observations that seek to detect GWs are sensitive **only** to the value of the Riemann tensor at a **given point** in space." (...) "For example, the Riemann tensor components [XXX], which are directly observable by detectors such as LIGO, are given in terms of the gauge invariant variables as [Eq 2.70]. Thus, at least **certain combinations** of the gauge invariant variables are locally observable."

Any observable of the gravitational field is *quasi-local* (L. Szabados), so the phrase "the value of the Riemann tensor at a **given point** in space" is sheer poetry; check out the "point particle limit" in Bob Wald's arXiv:0907.0412, p. 3 and ref [4] therein.

The poetry in the phrase "at least **certain combinations**" is also unacceptable. We are **not** dealing with some mixture of *distinguishable* "non-local" vs. "local" gauge invariant variables. It is not like dealing with some statistical mixture of 'unobservable-by-LIGO non-local *black* balls', as opposed to 'observable-by-LIGO local *white* balls', so that LSC members could hope that LIGO can be tuned to detect "at least **certain combinations**" of the white balls, without bothering about the black ones. The increasing of sensitivity toward the "white balls" is just ridiculous. And costs **billions**.

More from Stephen J. Crothers (25 July 2009), LIGO, LISA Destined to Detect Nothing, www.sjcrothers.plasmaresources.com/GW.pdf

[2] Since LSC does not have elected President and governing body, similar to the GRG Society (LSC Member Groups appoint the Collaboration Council, which in turn elects the LSC Spokesperson, who "leads the LSC, and is empowered to represent the LSC to the outside world", LSC Bylaws, Secs 4 and 7.1), all LSC Members are responsible for authorizing the LSC Spokesperson and Collaboration Council to waste taxpayers' money on their behalves.

[3] The underlying *assumptions* in the cases of LIGO and PSR1913+16 are **incomparable** for the following reasons. Regarding the latter, it was the first binary pulsar, discovered in 1974. As Brian Dolan explains, "a pulsar is a rotating dipole and rotating dipoles emit electromagnetic radiation, thus losing energy. This is not actually the source of the (EM) radiation that is directly observed. The electromagnetic pulses seen from a pulsar are due to radiation from beams of charged particles emitted along the axis of the dipole and sweeping past the Earth like a lighthouse beam." (Brian P. Dolan, Lecture Notes MP476: Cosmology, Sec. 2.14.3 Pulsars, September 21, 2010, p. 41). By analyzing the changing Doppler shifts of PSR1913+16 (redshifted and blueshifted pulse periods), R. Hulse and J. Taylor inferred that PSR1913+16 should consist of two neutron stars, separated by distance roughly the radius of the Sun.

Also, "the period first grew **longer** and then grew **shorter** in a cycle that took 7.75 hours" (Michael Seeds and Dana Backman, *Horizons: Exploring the Universe*, 11th Ed., Brooks Cole, 2009, p. 217).

Now, in order to apply the old Tanzanian saying above, LIGO "scientific" collaboration should explain how could "the period first grew **longer** and then grew **shorter**", and then eliminate all trivial explanations of the *inferred* loss of kinetic energy (*e.g.*, Sachiko Tsuruta *et al*., Cooling of pulsars, *Astrophysical Journal*, 176 (1972) 739-744; Alex Y. Potekhin *et al*., The magnetic structure of neutron stars and their surface-to-core temperature relation, *Astronomy & Astrophysics*, 443 (2005) 1025-1028). Forget it.

LIGO Scientific Collaboration ACKNOWLEDGEMENTS (July 2010)

"The authors gratefully acknowledge the support of the United States National Science Foundation for the construction and operation of the LIGO Laboratory and the Science and Technology Facilities Council of the United Kingdom, the Max-Planck-Society, and the State of Niedersachsen/Germany for support of the construction and operation of the GEO600 detector. The authors also gratefully acknowledge the support of the research by these agencies and by the Australian Research Council, the Council of Scientific and Industrial Research of India, the Istituto Nazionale di Fisica Nucleare of Italy, the Spanish Ministerio de Educacion y Ciencia, the Conselleria d'Economia, Hisenda i Innovacio of the Govern de les Illes Balears, the Royal Society, the Scottish Funding Council, the Scottish Universities Physics Alliance, The National Aeronautics and Space Administration, the Carnegie Trust, the Leverhulme Trust, the David and Lucile Packard Foundation, the Research Corporation, and the Alfred P. Sloan Foundation."

How did they manage to drag so many people into this nonsense, I wonder.

Notice that LIGO Scientific Collaboration (LSC) have already prepared 'Plan B', in case they fail miserably again. In their "science white paper", submitted to the Astro2010 Decadal Survey (Bernard F. Schutz et al., arXiv:0903.0100v1 [gr-qc], p. 3), they wrote:

"It is worth reminding ourselves why and where GR might fail." (...) "Any such failure of GR should point the way to new physics."

Once the "advanced LIGO" fails in 2015, they may celebrate the 100th anniversary of Einstein's GR with their "way to new physics", claiming that their total failure is actually of fundamental importance, like the negative result for the ether drift in the experiment of Michelson and Morley ... but with just a few billion dollars more for LISA and Einstein Telescope, everything will be just right.

Why? Because "each polarization has its own gravitational-wave field" (Kip Thorne). All you need is to **separate** these gravitational-wave fields,

http://www.god-does-not-play-dice.net/#GR19

And if they fail, Einstein will take the blame. Who else?

Do not *ever* say you knew nothing about it.

D. Chakalov
July 19, 2010

Subject: Re: Albert Einstein's last lecture, April 14, 1954
Date: Tue, 27 Jul 2010 22:15:08 +0300
From: Dimi Chakalov <dchakalov@gmail.com>
To: Ted <newman@pitt.edu>
Cc: Richard Price <Richard.Price@utb.edu>,
Josh Goldberg <goldberg@phy.syr.edu>

Dear Ted:

> You should allow us each to our own 'silliness' and 'errors'. If we
> are wrong then history will bare that out and we will look silly.

Sorry, this is not a professional response. The arguments at the links below are one-click away. Please check them out. We aren't taking philosophy here.

> But maybe there is a chance that we are correct.

But I'm not talking about your H-space nor arXiv:1007.4351v1 [gr-qc].

It's all about LIGO, which has been a dead turkey from the outset -- see ExplanatoryNote.pdf below.

Josh started all this mess, with the 1957 Chapel Hill "Conference on the Role of Gravitation in Physics", organized by Bryce De Witt with US Air Force money. See what he emailed me on 14 Jan 2009 (printed below): do you see any argument in support of the "theory" of LIGO?

Do you believe LIGO is designed to measure *anything* related to Bondi-Metzner-Sachs (BMS) group ? See ExplanatoryNote.pdf below.

How long will you, Josh, and Richard keep quiet ?

Please act professionally, and save hundreds of million US dollars -- taxpayers' money -- from wasting with the "advanced" LIGO and LISA.

It is not fair to keep quiet.

Yours,

Dimi

On Wed, 14 Jan 2009 13:53:30 -0500, Message-ID:
<496E34AA.2090703@phy.syr.edu>, Joshua Goldberg
<goldberg@physics.syr.edu> wrote:
>
> Dear Dr. Chakalov:
>
> I have read most of your comments and don't agree with them. I no
> longer have the energy to detail my opinion. Apart from my own work
> in the '50's, for me the definitive paper on gravitational waves is that
> by Bondi et al written in 1960, but published in '62. Therefore, I make
> no comment on your work.
>
> Josh Goldberg

> On Jul 27, 2010, at 8:11 AM, Dimi Chakalov wrote:
>
>> Dear Ted:
>>
>> In case you are professionally interested in GR, see
>>
>> http://www.god-does-not-play-dice.net/#Zinkernagel_note
>>
>> I trust you and Richard Price know that LIGO is for the birds:
>>
>> http://www.god-does-not-play-dice.net/ExplanatoryNote.pdf
>>
>> When are you going to respond professionally? Time is running out!
>>
>> Dimi
>

Arrow of Space

Excerpt from
http://www.god-does-not-play-dice.net/#Zinkernagel

Subject: Weyl's principle: Comoving reference frame & proper time
Date: Fri, 9 Jul 2010 20:07:23 +0300
From: Dimi Chakalov <dchakalov@gmail.com>
To: S E Rugh <rugh@symposion.dk>, H Zinkernagel <zink@ugr.es>

Dear colleagues,

Thank you for your clarification of Weyl's principle [Ref. 1]. I believe it is obvious that the dynamics of space, as being "expanded" by itself (DDE of "empty space"), is missing in GR,

http://www.god-does-not-play-dice.net/#Blanchard

I think the human brain may possess such self-acting faculty, but if you try to pinpoint its mind, it will inevitably turn out to be "dark", just like the UNdecidable quantum state,

http://www.god-does-not-play-dice.net/#Brun

If you know how to model a universe that can act upon itself, please do write me back.

Kindest regards,

Dimi Chakalov

[Ref. 1] Svend E. Rugh, Henrik Zinkernagel, Weyl's principle, cosmic time and quantum fundamentalism, arXiv:1006.5848v1 [gr-qc],
http://arxiv.org/abs/1006.5848v1

p. 2: "Weyl's principle: The world lines of galaxies, or 'fundamental particles', form (on average) a spacetime-filling family of non-intersecting geodesics converging towards the past.

"The importance of Weyl's principle is that it provides a reference frame based on an expanding 'substratum' of 'fundamental particles'. In particular, if the geodesic world lines are required to be orthogonal to a series of space-like hypersurfaces, a comoving reference frame is defined in which constant spatial coordinates are "carried by" the fundamental particles. The time coordinate is a cosmic time which labels the series of hypersurfaces, and which may be taken as the proper time along any of the particle world lines."

Note: Time does not originate from 'change *in* space' (coordinate time, Kodama time, *etc.*; see Julian Barbour), but from chance *of* space (cf. Fig. 2). Example with the Hubble Law **here**.

It is the arrow of **space** (AOS) that makes 'more and more space' to *emerge* from [we-do-not-know-it], hence "the distances between all elements of the cosmic substratum (or, fluid) grow with **time**" (M. Chodorowski), and we enjoy 'arrow of spacetime'. Were it possible to *physically* trace back the entity called [we-do-not-know-it], it won't be "dark" anymore, and the Aristotelian First Cause would be shifted one step further.

Notice that the arrow of **space** (AOS) leads directly to Machian quantum gravity, as the

motion of *any individual body* is to be defined with respect to the entire universe (E. Mach, The Science of Mechanics (1883), Open Court, 1960, pp. 286-287). It has "infinite extent" (J. Barbour, arXiv:1007.3368v1 [gr-qc], p. 26), being in *the* state of **ONE-ness** (global mode of spacetime, cf. Fig. 2), and keeps "the last remnant of physical objectivity" (A. Einstein).

Physicists hate the Aristotelian metaphysics, however. They relentlessly try to picture [we-do-not-know-it] as some physical stuff with positive energy density, and end up with searching for an 'elephant in a china shop', only to find out that the elephant must be many orders of magnitudes larger than the store itself.

The AOS-driven dynamics of living and quantum/gravitational systems will inevitably produce a *self-acting* action, because the non-linear bi-directional negotiation between every "fish" and 'the rest of fish from the shoal' is "dark" in the local mode of spacetime. Sorry for repeating this again; I know it's boring.

If you disagree with the arrow of space (AOS), just try to define *quasi-local* quantities in asymptotically flat spacetime wrapped with (flexible?) "boundaries" at *spatial* infinity, yet keeping the splitting of spacetime (ADM) into two entities, one of which (called 'time') would refer to things that "evolve" with respect to something fixed, called 'space'. As R. Penrose acknowledged in November 1981 [Ref. 2], "several problems of interpretation remain to be solved".

Fuggedaboudit, Roger. Time can "evolve" just as much as space can; hence the arrow of *space* viz. arrow of spacetime endowing the conservation of *quasi-local* observables of Type I matter fields (Eq. 1 below), bootstrapped by gravity. Direct observation of "**pure** gravitational field" (cf. Dupre and Tipler below) is like direct observation of the human mind, while acting on its brain. Gravity makes all matter fields *self*-interacting, hence the proper GW detector should be endowed with the faculty of self-acting, that is, capable of acting on its own *potential* states along the arrow of spacetime.

We should drop the "no prior geometry" assumption in GR and derive the ether from Quantum Theory -- the vanishing of the covariant divergence of the stress-energy tensor (not "pseudotensor") is a quantum-gravitational phenomenon.

According to today's GR (Mario Goto *et al*., arXiv:1007.4846v1 [gr-qc]), "the Strong Equivalence Principle postulates that at every space-time point in a arbitrary gravitational field it is possible to choose a locally inertial coordinate system such that, within a **sufficiently small** (notice the poetry - D.C.) region of the point in question, the laws of the nature take the same form as in unaccelerated Cartesian coordinate systems in the absence of gravitation. On the other hand, the Weak Equivalence Principle is nothing but a restatement of the observed equality of gravitational and inertial mass."

NB: *When* and *how* does 'the **finite** small' shift to "*sufficiently* small", such that (operational definition) you "may erect a locally inertial coordinate system in which matter satisfies the laws of special relativity" (Steven Weinberg, pp. 62-68)? The laws of STR are applicable only if the so-called "*sufficiently* small" has **already** become a *bona fide* geometrical point from the global, Heraclitean, and non-Archimedean realm. On the other hand, the effects of gravity apply **only** to the Archimedean realm of **finite** things, such as 'one second' (see the drawing below) or 'one meter'. The bi-directional "talk" of matter and geometry ("space acts on matter, telling it how to move; in turn, matter reacts back on space, telling it how to curve", John Wheeler) is the ultimate "talk" of the Archimedean (local) and non-Archimedean (global) realms of spacetime. The cornerstone puzzle of GR is that your wristwatch *does indeed* read this "talk", and the covariant

divergence of the stress-energy tensor does indeed disappear, or rather "dissolves" in the purely geometrical, non-Archimedean realm of "*sufficiently* small", staying available to *re-emerge*, as a quantum-gravitational phenomenon.

On September 21, 2008, I suggested '*necessary* and *sufficient* conditions for spacetime': the former condition concerns physical substratum with positive energy density, while the latter condition refers to a global, Heraclitean, and non-Archimedean state of the whole universe as ONE -- a *pre-geometric plenum* "connecting" the geometrical "points". It is totally removed from the local mode of spacetime **by** the so-called 'speed of light'; hence Einstein, and many other physicists, called it "ether".

If you disagree with the *pre-geometric plenum*, try to 'connect the dots' in the drawing of 'one second' by using only Archimedean geometry and physical stuff that is invariant under "active" diffeomorphisms. Or explain the vanishing of the covariant divergence of the stress-energy tensor. Good luck.

D.C.
July 10, 2010
Last update: August 20, 2010

[Ref. 2] R. Penrose, Quasi-local Mass and Angular Momentum in General Relativity, *Proc. R. Soc*. A381 53-63 (1982); cf. p. 53:

It is perhaps ironic that *energy conservation*, a paradigmatic physical concept arising initially from Galileo's (1638) studies of the motion of bodies under gravity, and which now has found expression in the (covariant) equation

$$\nabla_a T^{ab} = 0 \qquad (1)$$

– a cornerstone of Einstein's (1915) general relativity – should nevertheless have found no universally applicable formulation, within Einstein's theory, incorporating the energy of gravity itself. The energy tensor T^{ab}, providing the right-hand side to the Einstein field equation, describes the complete local energy, this being the sum of the energy densities of all *non*-gravitational fields. Gravitational (field) energy, on the other hand, contributes non-locally to the total energy, its presence being manifested in the fact that (1) does not, by itself, give rise to an integral conservation law. To do so, (1) would have had to have had the form of a divergence of a vector – like the equation expressing conservation of electric charge:

$$\nabla_a J^a = 0 \qquad (2)$$

– rather than of a valence-2 tensor.

Luca Lusanna *et al*., arXiv:1007.4071v1 [gr-qc]

"Almost a century after the birth of GR there is yet no universal consensus on how energy, momentum and other conserved quantities should be defined in it from a fundamental viewpoint. (...) The main reason to defend covariant conserved quantities in GR is that, according to the general covariance principle, if conserved quantities were intrinsically non-covariant they would be irrelevant to the description of Nature.
....

"To be precise, the general covariance principle claims that the description of Physics can be done independently of any a priori coordinate fixing. It does not exclude that in particular situations one has a posteriori preferred coordinates, preferred splittings between space and time, or preferred observers; see [2], [3], [4], [5]. One very well-known example of such a situation is Cosmology: in Friedmann-Robertson-Walker solutions one has canonical clocks (e.g. the temperature of the cosmic background radiation) that not only break Lorentz invariance defining a cosmic (global) time but break the Galilei invariance defining observers which are **at rest** with respect to the cosmic background radiation."

Luca Lusanna and Massimo Pauri (6 March 2005), General Covariance and the Objectivity of Space-time Point-events,
http://philsci-archive.pitt.edu/archive/00002224/

Chiang-Mei Chen and James M. Nester, *Gravitation & Cosmology* 6, 275 (2000); arXiv:gr-qc/0001088v1

"Via their energy-momentum density, material sources generate gravitational fields. Sources interact with the gravitational field locally, hence they should be able exchange energy-momentum with the gravitational field -- locally. From this physical conception we are led to expect the existence of a local density for gravitational energy-momentum."

Maurice J. Dupre, Frank J. Tipler, General Relativity As an Aether Theory, July 28, 2010, arXiv:1007.4572v1 [gr-qc]
http://arxiv.org/abs/1007.4572

"Most of the leading relativists in the early twentieth century, for examples Eddington [18] and even Einstein himself [19], claimed that general relativity was an æther theory, but they gave no mathematical demonstration of their claim.
....

"According to Einstein, in his Autobiography [12], the most natural choice for the tensor $S_{\mu\nu}$ is the stress-energy tensor. Einstein was uncomfortable with adding the term [xxx] to the Ricci tensor, saying it was only introduced for 'technical reasons,' required by the vanishing of the covariant divergence of the stress-energy tensor.
.....

"The vanishing of the divergence of the stress energy tensor is derived in Minkowski space using all the symmetries of Minkowski space. But leaving Minkowski space for a general spacetime means losing the symmetries that allowed the derivation of T [xxx] = 0 to start with!
.....

"As MTW emphasize, the requirement that there is no "prior geometry"— that the metric is entirely determined by the field equations for gravity — actually fathered general relativity.
.....

"The question is, what should we select for the tensor $S_{\mu\nu}$. According to Einstein in his

Autobiography: "On the right side [of the Einstein equations] we shall then have to place a tensor also in place of [the mass density] . Since we know from the special theory of relativity that the (inertial) mass equals energy, we shall have to put on the right side the tensor of energy-density— more precisely the entire energy-density, insofar as it does **not** belong to the **pure gravitational field** ([12], p. 75.)."

The *wegtransformierbar* gravity "over a point"

http://www.god-does-not-play-dice.net/#Levi_Civita

Subject: The vanishing of the covariant divergence of the stress-energy tensor is a quantum-gravitational phenomenon
Date: Mon, 2 Aug 2010 20:05:20 +0300
Message-ID:
<AANLkTikaKMYEERCfKuyv7RxDdYXiYNgRWrx7gTuS0o6Z@mail.gmail.com>
From: Dimi Chakalov <dchakalov@gmail.com>
To: Angelo Loinger <angelo.loinger@mi.infn.it>,
Tiziana Marsico <martiz64@libero.it>,
John Stachel <john.stachel@gmail.com>,
Mihaela Dorina Iftime <miftime@gmail.com>,
Claus Kiefer <kiefer@thp.uni-koeln.de>,
Domenico Giulini <domenico.giulini@itp.uni-hannover.de>,
Norbert Straumann <norbert.straumann@gmail.com>,
Helmut Friedrich <hef@aei.mpg.de>,
Jeremy <jb56@cam.ac.uk>,
Laszlo Szabados <lbszab@rmki.kfki.hu>,
Shing-Tung Yau <yau@math.harvard.edu>,
Richard M Schoen <schoen@math.stanford.edu>,
Niall Ó Murchadha <niall@ucc.ie>,
Claus Gerhardt <gerhardt@math.uni-heidelberg.de>,
Adam Helfer <adam@math.missouri.edu>

Dear colleagues,

It had been suggested to Einstein by Levi-Civita, who had pointed out that, by virtue of Bianchi identities, the covariant divergence of the stress-energy tensor of matter and fields *has to* be equal to zero, in order to satisfy the dynamical laws of continuous media, as known in 1915:

Angelo Loinger, Einstein, Levi-Civita, and Bianchi relations,
arXiv:physics/0702244v1 [physics.gen-ph]
http://arxiv.org/abs/physics/0702244

However, 'time' in dynamical laws does not come from 'change in space', but from 'change *of* space',

http://www.god-does-not-play-dice.net/#Zinkernagel_note

(Example with the Hubble Law at the link above.)

Hence we enjoy 'arrow of space', driven by some "dark" [we-do-not-know-it]. The (covariant divergence of the stress-energy tensor of) matter and fields can *completely* vanish/dissolve into the quantum vacuum, and stay available there for any partial, full, or "over unity" recall, if and when needed.

All this requires a new form of reality, after Schrödinger, Margenau, and KS Theorem:

http://www.god-does-not-play-dice.net/#KS

My next talk will be in Munich, on Wednesday, 25 November 2015. Meanwhile, check out the implications for LIGO, Virgo, GEO, LCGT, and LISA at

http://www.god-does-not-play-dice.net/ExplanatoryNote.pdf

Sincerely,

Dimi Chakalov

Note: Since we represent matter by "a wooden nose in a snowman" (A. Einstein), what actually "vanishes" is completely outside present-day GR. Perhaps it is safe to say that the confusion about *what* becomes 'quasi-local' due to gravity, and exactly *how*, is enormous -- check out Carl Hoefer, Roger Penrose, Babak and Grishchuk [Ref. 1], and Einstein's Equivalence Principle (Okon and Callender; Hans Ohanian): the *wegtransformierbar* faculty of gravity (Hermann Weyl) over a "point", in the non-Archimedean realm of 'the grin of the cat without the cat', as observed by Alice.

Both the Riemannian space and Minkowski space can *only* accommodate **facts**. In the latter case, you have insurmountable problems with reconciling QM with STR. In the former case of Einstein's GR, the only event that can qualify as 'fact' is the *already*-completed bi-directional "talk" of matter and geometry over a "point". This is the origin of "the laws of an instant" (Karel Kuchar). But we may derive dynamical laws from 'an instant' only in Minkowski space; see what happens in GR here and here.

To be precise: I believe there exists a concealed, yet-to-be-identified object, which plays a **dual role** in GR, as it shows up as *either* "components of the metric tensor" *or* "gravitational field variables" [Ref. 1]. In plain words: "the metric is treated as a field

which not only affects, but also is (at the *very same* instant - D.C.) affected by, the other fields" (John Baez). And from Laszlo Szabados: "the metric has a double role: it is a field variable and defines the geometry at **the same time**". Therefore, if you employ some classical space that can *only* accommodate **facts**, and try to apply the Equivalence Principle, you are destined to a blind alley: on the one hand, the "ether" must *not* "come back" (M. Montesinos), but on the other hand -- the gravitational (field) energy "contributes non-locally to the total energy" (R. Penrose), and you're back in murky waters, since November 1915. People are very reluctant to acknowledge that the gravitational "field" is **not** a classical field. Instead, they either keep quiet (Chris Isham) or offer their "pearls" of wisdom, like Gerard 't Hooft.

I think the introduction of some "flat space" in GR (CEOFOP, p. 25), as well as a "true, real stress-energy-momentum tensor for gravity" (see above), is *not even wrong*. Yet such ideas deserve publishing, because students should be made aware how vulnerable the mathematical formulation of GR is to ridiculous ideas -- see CEOFOP's "pearls" above.

Let me try to explain my viewpoint, in the framework of 'the universe modeled as a brain'. I take for granted that matter can *interact* with matter only. Corollary: any *direct* action of geometry on matter (e.g., Feynman's "sticky beads") is banned. It is like direct action of the human mind on its brain or other physical systems. In this context, the action of the alleged GW strain on physical bodies (LIGO's arms) should be considered 'GW psychokinesis'. To avoid such parapsychology, we should investigate how matter *interacts* with matter in a Machian universe, in which the non-linear negotiation and feedback from 'everything else' is encoded in the *emergence* of what has been called in GR 'geodesics'.

Regarding GWs: the *omnipresent* "direction" of GW propagation takes place in the global mode of spacetime; it correlates every "fish" with the whole school of fish, hence such AOS-driven dynamics will produce an *emergent* quasi-local geodesic of every "fish", and will induce **geodesic waves**, much like the waves of the legs of a centipede. Of course, we are confined in the *local mode* of spacetime, and cannot observe these *emergent* geodesics waves.

In the *local mode*, no fish could register any "deviation" from *anything*, just as in the example with four pre-correlated dice; details in 'the quantum principle'.

The "Gespensterfelder" (EPR-like) "action" from 'the whole school' on every quasi-local fish will show up as "dark", because it cannot be traced back from any quasi-local fish. LIGO is not endowed with the faculty of 'self-acting', and cannot detect such "dark energy from empty space".

Recall the game of '20 questions', courtesy from John Wheeler [Ref. 2]. The *quasi-local* object 'cloud' cannot be represented by a tensor, because it is **not** an 'objective reality out there'. It brings the quasi-local quantum-gravitational contributions -- just the *contributions* -- to matter and fields in the r.h.s. of Einstein equation. These contributions are being converted, in the global mode of spacetime, to *bona fide* type I matter fields; they just acquire an additional degree of freedom due to the bootstrapping faculty of gravity, resembling the geodesic hypothesis (A. Rendall) in today's GR (summary from K. Koehler, B. Mashhoon, and N. Dadhich).

To explain these quasi-local quantum-gravitational *contributions*, think of the object 'cloud' as a fish from the school of fish: at each and every instant from their collective quasi-local "geodesics", we have **local** conservation of energy and momentum to every

closed (finite infinity, G.F.R. Ellis) system [matter & cloud], but this **local** conservation pertains only to one "horizontal" snapshot from the arrow of **space** -- cf. Figs 1 and 2 from 'Die Bahn'.

Thus, "the covariant divergence of the stress-energy tensor" (Wiki) does indeed vanish, because at *each and every instant* from the arrow of space (hence arrow of spacetime) the bi-directional talk of matter and geometry (cf. the double role of Einstein's equations, M. Montesinos) has been **already** completed, and in such already-correlated instantaneous snapshot all "nonlocal" and "dark" stuff has **totally vanished**.[1]

Hence the "freely falling" bodies can indeed follow geodesics, as "the stress-energy has **zero** divergence" (Kenneth R. Koehler) at each and every instant 'now' from the **local mode** of spacetime (cf. Fig. 1). Picture these "horizontal" (local mode) sections of the arrow of spacetime as Photoshop layers stacked on the **w** arrow (cf. Fig. 2 above): the requirement 'stress-energy must have **zero** divergence' is indeed fulfilled, along with the Equivalence Principle, but **only** "during" an instant 'now' from the *local* mode.

However, because we inevitably **flatten** all "Photoshop layers" due to the so-called "speed of light", we see a perfect continuum of *already*-correlated facts, chained along a *perfectly continual* trajectory (e.g., the trajectory of a Frisbee on Minkowski space) or *perfectly continual geodesic*. In order to follow a *geodesic* (Alan Rendall), the Frisbee will have to obtain all quantum-gravitational *contributions* to its path from 'the rest of the universe', and then it will move like a fish from a school of fish. Most importantly, such quasi-local fish will always have strictly positive inertial mass.

(On March 27, 2007, Prof. Warren W. Johnson, LSU, wrote: "Ah ha, caught you lying! You do have a radically different "theory" to compete with Einstein's theories." But LIGO fellow Warren W. Johnson is wrong. I strictly follow Einstein's GR, and am trying to remove all "miracles" in GR (resembling the projection postulate in QM), which preclude us from understanding the *geodesic hypothesis*, as explained by Alan Rendall. If you

---

[1] Michael Weiss and John Baez, Is Energy Conserved in General Relativity?
http://math.ucr.edu/home/baez/physics/Relativity/GR/energy_gr.html

Regarding the Einstein field equations, Michael Weiss and John Baez wrote: "So one can argue that "gravitational energy" does NOT act as a source of gravity. (...) So one can argue that "gravitational energy" IS a source of gravity." The first sentence pertains to the *local mode* of spacetime, while the second one refers to Fig. 2 from *Die Bahn.*

More from Luboš Motl, Why and how energy is not conserved in cosmology, August 11, 2010,
http://motls.blogspot.com/2010/08/why-and-how-energy-is-not-conserved-in.html

Luboš Motl: "Can't you use the same trick to derive the energy density in general relativity, too? Well, you can. But you get zero. The variation of the action with respect to the metric tensor gives you something that must vanish because the metric tensor is a dynamical degree of freedom in general relativity and the action must be stationary with respect to all the dynamical degrees of freedom - which now includes the metric tensor, too!
....
"Clearly, if you don't have any asymptotic region of your spacetime, everything can happen."

Energy Is Not Conserved, by Sean Carroll & colleagues,
http://blogs.discovermagazine.com/cosmicvariance/2010/02/22/energy-is-not-conserved/

"Whereas if you say "in general relativity spacetime can give energy to matter, or absorb it from matter, so that the total energy simply isn't conserved," they might be surprised but I think most people do actually gain some understanding thereby. (…) Energy isn't conserved; it changes because spacetime does."

agree with Warren Johnson, or trust Chris Isham, try to uncover some "**total field** of as yet unknown structure", and send your proposal to Alan Rendall. I hope he will then re-write his online article.)

Notice that the vanishing property of tμν (M. Montesinos) is manifestation of the so-called 'problem of time': nothing can possible "move" in such block universe; cf. G.F.R. Ellis below.

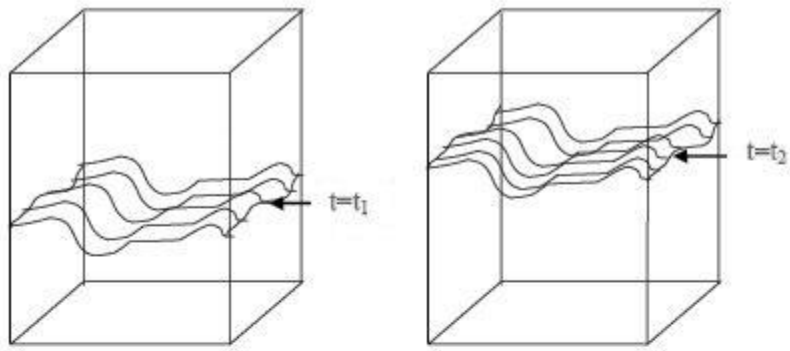

Figure 4: *Different time surfaces in a curved block space-time. General relativity allows any `time' surfaces that intersect all world lines locally. The spacetime itself is also curved. Future and past physics, including the spacetime itself, are locally determined from the data on any such surface.*

The warrant for this view in the case of special relativity is the existence and uniqueness theorems for the relevant fields on a fixed Minkowski background spacetime; for example, the existence and uniqueness theorems for fluid flows, for Maxwell's equations, or for the Klein Gordon equation (see Hadamard 1923; Wald 1984: 243-252). In the case where gravity is significant, the warrant is the existence and uniqueness theorems of general relativity for suitable matter fields (Hawking and Ellis 1973: 226-255; Wald 1984: 252-267). They show that for such matter, initial data at an arbitrary time determines all physical evolution, including that of the space-time structure, to the past and the future equally, because we can predict and retrodict from that data up to the Cauchy horizon. The present time has no particular significance; it is just a convenient time surface we chose on which to consider the initial data for the universe. We could have equally chosen any other such surface.

If you believe in the Riemannian space of 'facts' and use only Archimedean geometry, you will inevitably encounter *insurmountable* problems with the conservation of energy and momentum in present-day GR, as well as tug-of-war "dark" effects of gravity, dubbed CDM and DDE.

My suggestion is to zoom on the "infinitesimal variables" [Ref. 3] and reveal the interplay of matter and geometry -- their bi-directional "talk" on the **interface** of the Archimedean (material) and non-Archimedean (geometrical) realms. The end result is a *perfect continuum* in the local mode of spacetime.

NB: This can **only** happen if there is a **physical** mechanism producing such perfectly smooth spacetime manifold, based on the so-called speed of light: the "duration" of the

bi-directional "talk", in the local mode of spacetime, is **zero**.

This is the meaning of the statement 'Your Global Time is ZERO'. More in my talk on Wednesday, 25 November 2015. My first talk didn't attract the attention of the theoretical physics community, but once the "enhanced" and "advanced" LIGO fail miserably by November 2015, I hope people will get serious about GR**:**

"The representation of matter by a tensor was only a fill-in to make it possible to do something temporarily, a wooden nose in a snowman." (Albert Einstein's Last Lecture, April 14, 1954)

D. Chakalov
August 6, 2010
Last update: September 6, 2010

[Ref. 1] S. Babak and L. Grishchuk, The Energy-Momentum Tensor for the Gravitational Field, *Phys. Rev.* D61 (2000) 024038; gr-qc/9907027 v2.

"The search for the gravitational energy-momentum tensor is often qualified as an attempt of looking for "the right answer to the wrong question". [cf. C.W. Misner, K.S. Thorne and J.A. Wheeler, Gravitation (W. H. Freeman and Company, New York, 1973), p. 467 - D.C.]
...
"In traditional field theories, one arrives, after some work, at the energy-momentum object which is: 1) derivable from the Lagrangian in a regular prescribed way, 2) a tensor under arbitrary coordinate transformations, 3) symmetric in its components, 4) conserved due to the equations of motion obtained from the same Lagrangian, 5) free of the second (highest) derivatives of the field variables, and 6) is unique up to trivial modifications not containing the field variables. There is nothing else, in addition to these 6 conditions, that we could demand from an acceptable energy-momentum object, both on physical and mathematical grounds.
...
"In the geometrical formulation of the general relativity, the components $g_{mn}(x^a)$ play a **dual role**. From one side they are components of the metric tensor, from the other side they are considered gravitational field variables. If one insists on the proposition that "gravity is geometry" and "geometry is gravity", then, indeed, it is impossible to derive from the Hilbert-Einstein Lagrangian something reasonable, satisfying the 6 conditions listed above."

[Ref. 2] John and Marry Gribbin, *In Search of Schrödinger's Cat*, Black Swan, London, 1998, p. 209

"There had been a plot *not* to agree on an object to be guessed, but that each person, when asked, must give a truthful answer concerning some real object that was in his mind, and which was *consistent with all the answers that had gone before*. With only one question left, John Wheeler guessed: "Is it a **cloud**?" The answer was "Yes!"

[Ref. 3] Eric Schechter (5 Dec 2009), Infinity: Introduction and History.

Comment: Eric Schechter wrote that "if you take a medium-sized number and divide it by an enormous number, you get a number very close to 0."

Since the notions of infinity and infinitesimal are, in some (yet to be explained) sense, reciprocal, the latter can be illustrated with the following expression (notice that this is just an illustration of the puzzle stressed by Lucretius):

$$\mathbf{1}/\infty \rightarrow \mathbf{0}$$

We take a medium-sized number, **1** , to represent a *finite* Archimedean thing (*e.g.*, one meter or one second), and divide it by ... *what kind* of infinity? Potential infinity or completed/actual infinity? No matter what we choose, we cannot **recover** the *finite* Archimedean thing by multiplying "zero" by "infinity". We are "bartenders" (recall Thompson's lamp paradox).

That's the puzzle of the *finite* Archimedean entities called 'space' and 'time' (local mode). Viewed from the local mode of spacetime, the infinitesimal -- the atom of geometry -- is *the* instantaneous state of Zeno's arrow. It is in 'absolute rest' with respect to all relativistic systems, hence we can define *the* elementary increment of physical variables (ds and dt) with respect to such "ether". I call it 'geometrical point', and stress that it is a non-Archimedean entity (global mode of spacetime), which builds up 'the grin of the can without the cat' (Alice), in line with the Continuum Hypothesis (CH). The latter is *neither* provable *nor* disprovable -- cf. Kurt Gödel. Why? Because *the continuum* emerges from the non-Archimedean realm of 'the universe as ONE', in which our mundane notions of "zero" and "infinity" do not hold anymore. They are simply not-applicable.

All we can say is that, depending on the "direction" we look at 'the universe as ONE', it looks like either *infinitely small* or *infinitely large*, as it wraps up the whole Archimedean 3-D space of present-day GR. Hence we can enjoy "self-contained" isolated systems, the asymptotic spacelike regime included (Adam Helfer).

The recipe is simple and unique. How else can you remove the jejune poetry in mathematical GR and differential geometry textbooks, encoded in expressions like "sufficiently small" and "smooth" (Piotr Chrusciel), and in stipulations that the Hausdorff topological space has somehow been made "connected" (Chris Isham)? There is no matter at the primordial level of 'pure geometry' to enable such "connection", which would show up as the affine connection (Graham Nerlich).

"It is extremely difficult to induce penguins to drink warm water", says John Coleman.

I hope these brief (and frank) comments can explain the idea about bi-directional "talk" of the Archimedean (material) and non-Archimedean (geometrical) realms. Forget about tensors.

More on Wednesday, 25 November 2015. GR "bartenders" are cordially invited.

D.C.
August 9, 2010
Last update: August 11, 2010

SUMMARY

It goes without saying that I could be wrong (cf. p. 25). The task undertaken by Einstein [1] concerns roughly 4% from the mass-energy in the universe; the rest is still in the realm of [we-know-that-we-do-not-know-it].

What we do know, however, is that the *linearized* gravitational radiation [2] has not taken into account its inherent limitations, as stressed by Weyl [3] and Loinger [4]. Also, Bondi's famous Paper VII, Sec. D [5], is conspicuously missing in the "review" article by Sathyaprakash and Schutz [2]. The authors of the latter paper claim that the binary system PSR1913+16 "has lent irrefutable support to the correctness of the theoretical foundations aimed at computing gravitational wave emission, in particular to the energy and angular momentum carried away by the radiation", but do not realize that the pulsar and LIGO's task are **incomparable** 'apples and oranges'. Also, they don't even mention the honest evaluation of GW detection by one of them (B. Schutz).

The really important question is that gravitational radiation may result from the unknown mechanism producing *strictly positive quasi-local mass*. That's the crux of the matter.

There is no such thing as '**localized** source' of gravitational radiation: see p. 1. We can imagine some idealized fictitious "localized trajectory" and "localized positive mass" only in the fixed flat background space of Special Relativity. We can't keep this illusion in GR.

Forget about LIGO, LISA, *etc.* We should focus on the whole bundle of issues regarding the absence of 'dipole radiation', the unobservable "negative energy densities" [6], and seek 'the right answer to the *right* question' (MTW, p. 467) about the positive energy **density** at a "point", to reveal the *asymmetry* in the creation of one "charge" only. In the case examined by Banesh Hoffmann [6, p. 96], the mass-energy conservation equation of The Universe is the nullification of two "charges" (important details here):

$$\mathbf{0} = (\mathbf{-m}) + (\mathbf{+m}) \qquad (1)\ .$$

Perhaps the Arrow of Space is *tilting* the conservation equation (1) upon the cancellation of all-but-**one** potential state by two *atemporal* quantum-gravitational "waves", in such way that we observe strictly positive *quasi-local* inertial mass only, and no difference between gravitational and inertial mass. To be precise: **only** *quasi-local* inertial mass can be 'strictly positive' everywhere in an asymptotically flat spacetime fixed with the special "boundaries" of 'finite infinity' (perhaps G.F.R. Ellis has different opinion on how 'finite infinity' should be introduced in the case of "expanding" metric of space.)

Notice that the "tilting" of equation (1) leads straight to the so-called old cosmological "constant" problem from 1930s (also known as the 'fine-tuning problem', Laura Mersini) and to the "Why Now?" or "coincidence scandal" (S. Carroll): why is the dynamic dark energy (DDE) "of the same order of magnitude (roughly twice) as the energy in matter at the present moment in the history of the universe" (S. Weinberg).

The solution to both paradoxes can be simple and, to the best of my knowledge, unique.

We only need to postulate a second equation.

Namely, the total positive *quasi-local* mass and energy density of the physical universe (denoted by the Greek letter *Omega*) is **always**, at all instances from the Arrow of Space, tending *asymptotically* to unity:

$$\exists! \ (+\mathbf{m}) := \Omega \ \rightarrow \ \mathbf{1} \qquad (2) \ .$$

A brief elaboration on the two postulated equations:

1. As the physical universe "expands", the value of *Omega* does **not** change, and we always have an asymptotically flat spacetime. Ever since The Beginning, the value of *Omega* has *always* been 'approaching asymptotically unity', only in the current cosmological stage the alleged growth of DDE is "accelerated". Notice that there are no restrictions on the amount of (**-m**) in Eq. 1.
2. Both the evolution and the history of the physical universe are **non-unitary**: if we examine our history toward The Beginning, along the "deflation" time, the physical universe will be stripped from its physical content à la 'disappearance into nothing', but can only approach *asymptotically* The Beginning. Namely, once the physical universe has been created, it cannot be traced back to the l.h.s. of Eq. 1, prompted (presumably) by [John 1:1].
3. The creation of brand new physical stuff (the 'unknown unknown' included) along the cosmological time is **non-unitary** in the sense of Wheeler's statement: "Time is Nature's way to keep everything from happening all at once". For example, the W boson and the Z boson had no mass when the physical universe was created, but existed only as 'potential reality': an "inherent possibility" (Peter Weiss).
4. In the local mode of spacetime, created by the Arrow of Space, there is no background structure **whatsoever** – not even a background topology. (Compare it with C. Kiefer, "spacetime has disappeared, too, and only space remains.")
5. The Beginning did not start with some explosion like a "big bang" -- it takes an infinite amount of time, as read by your wristwatch, to approach it asymptotically along the "deflation" time. The singularity from the **finite** cosmological age (e.g., 13.7 billion years "after" The Beginning) is removed by a **dual** cosmological age: both *finite* (global mode of spacetime) and *infinite/indecisive* (local mode).
6. The cosmological "constant" problem (the 'fine-tuning problem') is automatically removed, as a pseudo-problem, in the PR^2 interpretation of QM: *potential reality* does not gravitate. As to the "coincidence scandal" (S. Carroll), check out Eqs 1 and 2.
7. The *driving force* of the Arrow of Space (presumably [John 1:1]) cannot spring entirely and exclusively from "the universe as a brain", which brings us to Virgil's statement: *Mens agitat molem* (*The Aeneid*, Ch. 6, 727). In German: *Der Geist bewegt die Materie*. Physically, *Der Geist* may look like 'the ideal monad without windows'. No *scientific statements* can be made about **it**, or else we will conflate religion with science. Thank God, this is impossible.

One last question needs to be answered: Why these efforts? Because I'm **not** a physicist, and all I've been doing, since January 1972, is building a model of the universe as a 'brain', in order to understand the physics of the human brain embedded in the "larger" one. The result is a new, to the best of my knowledge, approach to quantum gravity. It may be all wrong **iff** I actually "do not know enough theoretical physics to help with any research in that area." (Chris Isham)

What is certain, however, is that the *linearized* approximation of gravitational radiation is totally wrong. There is no sense of wasting more money with some "enhanced" and "advanced" LIGO. Enough is enough.

D. Chakalov
September 26, 2010, 14:14 GMT

References

1. Albert Einstein: "The right side (the matter part) is a formal condensation of all things whose comprehension in the sense of a field theory is still problematic. Not for a moment, of course, did I doubt that this formulation was merely a makeshift in order to give the general principle of relativity a preliminary closed expression. For it was essentially not anything more than a theory of the gravitational field, which was somewhat artificially isolated from a **total field** of as yet unknown structure."

2. B.S. Sathyaprakash and Bernard F. Schutz, Physics, Astrophysics and Cosmology with Gravitational Waves, arXiv:0903.0338v1 [gr-qc], http://arxiv.org/abs/0903.0338v1

p. 5: "Given that 96% of the mass-energy of the universe carries no charge, gravitational waves provide us with our first opportunity to observe **directly** (emphasis added – D.C.) a major part of the universe.

(Comments: The logical structure of the statement of Sathyaprakash and Schutz (hereafter SS) is of the type 'if A, then B'. It is not even *non-sequitur*, because both the "dark" [A] and [B] are unknown. D.C.)

…..

p. 7: "But the fundamentals of the theory of gravitational radiation are no longer in doubt. Indeed, the observation of the orbital decay in the binary pulsar PSR B1913+16 [388] has lent irrefutable support to the correctness of the theoretical foundations aimed at computing gravitational wave emission, in particular to the energy and angular momentum carried away by the radiation.

(Comment: SS are again wrong – the *assumptions* related to the binary pulsar and those regarding the specific task of LIGO are incomparable. D.C.)

…..

p. 9: "Gravitational field *vs* gravitational waves

"Gravitational waves are propagating oscillations of the gravitational field, **just as** (emphasis added – D.C.) light and radio waves are propagating oscillations of the electromagnetic field. Whereas light and radio waves are emitted by accelerated electrically-charged particles, gravitational waves are emitted by accelerated masses. However, since there is only one sign of mass, gravitational waves never exist on their own: they are never more than a small part of the overall external gravitational field of the emitter.

(Three comments:

1. We may imagine EM waves as propagating on undisturbed background of Minkowski spacetime, but GWs would have to "propagate" literally *within themselves* and *with respect to themselves*. The dynamics of the current version of GR cannot offer such inherently non-linear and self-acting propagation, resembling the manner by which Baron Munchausen pulled himself and his horse out of the mire. To quote H. Bondi [5], "the question of the "reality" of the waves essentially concerned whether they transported energy. Such transport is a fundamentally nonlinear phenomenon." More on the 'spherical cow' (linearized) approximation of GWs on pp. 12-13.

2. B. Hoffmann [6, p. 95] stressed another fundamental difference between GWs and EM waves: the latter "do not transport charge though their source is charge", while the former have a **dual job**: (1) to transport mass-energy (2) **while** being produced by mass-energy. Clearly, the current version of GR cannot supply the **source** of GWs; check out the full paper [6] and the references therein, and Eq. 1 above.

3. John Stachel (arXiv:gr-qc/0507078v2, footnote 46) mentioned a seminal paper by Niels Bohr and Leon Rosenfeld, *Zur Frage der Messbarkeit der elektromagnetischen Feldgrssen*, published in 1933, and wrote (emphasis mine – D.C.): "There is one big difference between the Maxwell field and the gravitational field: the non-universality of the electromagnetic charge-current vector versus the universality of gravitational stress-energy tensor. Because charges occur with two signs that can neutralize each other, a charge-current distribution acting as a source of an electromagnetic field can be manipulated by matter that is electrically **neutral** and so not acting as a source of a further electromagnetic field; and one can **shield** against the effects of a charge-current distribution. Because mass comes with only one sign, all matter (including non-gravitational fields) has a stress-energy tensor, **no shielding is possible**, and any manipulation of matter acting as a source of gravitational field will introduce an additional stress-energy tensor as a source of gravitational field. A glance at Bohr and Rosenfeld 1933 shows how important the possibility of **neutralizing** the charges on test bodies is for measurement of the (averaged) components of the electric field with arbitrary accuracy, for example. This difference may well have important implications for the measurement of gravitational field quantities."

It may be that an essential requirement for detecting GWs is a "charge-neutral background" for the action of geometry on matter. If so, this would require clarification of the l.h.s. of Eq. 1, and the hypothetical "bridge" suggested here. D.C.)

.....

p. 10, Fig. 1: "The two independent polarizations of gravitational waves (explanation in Kip Thorne's Caltech Physics 237-2002 here and here – D.C.) are denoted h**+** and h**×**. These are the two primary time-dependent observables of a gravitational wave.
.....

p. 11: "The lowest-order post-Newtonian approximation for the emitted radiation is the

quadrupole formula, and it depends only on the density (ρ) and velocity fields of the Newtonian system. If we define the spatial tensor Q_{jk}, the second moment of the mass distribution, by the equation

$$Q_{jk} = \int \rho x_j x_k \, \mathrm{d}^3 x, \quad (1)$$

then the amplitude of the emitted gravitational wave is, at lowest order, the three-tensor

$$h_{jk} = \frac{2}{r} \frac{d^2 Q_{jk}}{dt^2} \quad . (2)$$

"This is to be interpreted as a linearized gravitational wave in the distant almost-flat geometry far from the source, in a coordinate system (gauge) called the Lorentz gauge.

> (Comment: One of the authors, B. Schutz, acknowledged in August 1992 the unsolved problems with this speculation, but failed to mention them here. D.C.)

.....

"To get the TT-amplitude of a wave traveling outwards from its source, project the tensor in Equation (2) perpendicular to its direction of travel and remove the trace of the projected tensor. The result of doing this to a symmetric tensor is to produce, in the transverse plane, a two-dimensional matrix with **only two independent elements**:

$$h_{ab} = \begin{pmatrix} h_+ & h_\times \\ h_\times & -h_+ \end{pmatrix} \quad . (3)$$

"This is the definition of the wave amplitudes h+ and h× that are illustrated in Figure 1.
.....

p. 12: "It should be clear from the TT projection operation that the emitted radiation is not isotropic: it will be stronger in some directions than in others. It should also be clear from this that spherically-symmetric motions do not emit any gravitational radiation: when the trace is removed, nothing remains.
.....
p. 108: "As the detectors are upgraded during the period 2008 - 2014, the first detection could occur at any time; if the advanced detectors do not make early detections, then there will inevitably be serious questions about general relativity. (...) And if LISA does not see its verification binary sources, that will be fatal for general relativity."

3. Hermann Weyl, How Far Can One Get With a Linear Field Theory of Gravitation in Flat Space-Time? *American Journal of Mathematics*, Vol. 66, No. 4 (Oct., 1944), pp. 591-604
http://www.sjcrothers.plasmaresources.com/weyl-1.pdf

"At its present stage our theory (L) accounts for the force which an electromagnetic field exerts upon matter, but the gravitational field remains a

powerless shadow. From the standpoint of Einstein's theory this is as it should be, because the gravitational force arises only when one continues the approximation *beyond* the linear stage. We pointed out above that no remedy for this defect may be found in a gauge invariant gravitational energy-momentum tensor.
.....

"In spite of such achievements nobody will believe in the sufficiency of the linear theory (L). For, as we have said above, its gravitational field is a **shadow without power**. The fundamental fact that passive gravity and inertial mass always coincide appears to me convincing proof that general relativity is the only remedy for the shortcoming."

4. Angelo Loinger, On the displacements of Einsteinian fields *et cetera*, arXiv:physics/0506024v2
http://arxiv.org/abs/physics/0506024

"No "mechanism" exists in GR, which is capable of producing GW's. In other terms, if we displace a mass, its gravitational field and the related curvature of the interested manifold *displace themselves along with the mass*."

5. Hermann Bondi, Gravitational Waves in General Relativity (February 1, 1990):

"From the beginning I was very suspicious of the value of linearized treatments of the topic. Not only is general relativity by its nature a nonlinear theory, but the question of the "reality" of the waves essentially concerned whether they transported energy. Such transport is a fundamentally nonlinear phenomenon."

H. Bondi, M. G. J. van der Burg, and A. W. K. Metzner, Gravitational Waves in General Relativity. **VII.** Waves from Axi-Symmetric Isolated Systems, *Proceedings of the Royal Society of London*, Series A, Mathematical and Physical Sciences, Vol. 269, No. 1336 (Aug. 21, 1962), pp. 21-52
http://www.jstor.org/stable/2414436

"In **part D**, the mass of the system is defined in a way which in static metrics agrees with the usual definition. The principal result of the paper is then deduced, namely, that the mass of a system is constant if and only if there is no news; if there is news, the mass decreases monotonically so long as it continues. The **linear approximation** is next discussed, chiefly for its heuristic value, and employed in the analysis of a receiver for gravitational waves. Sandwich waves are constructed, and certain non-radiative but non-static solutions are discussed. This part concludes with a tentative classification of time-dependent solutions of the types considered."

6. Banesh Hoffmann (1964), Negative Mass as a Gravitational Source of Energy in the Quasistellar Radio Sources, *in*: Thomas Valone *et al.*, *Electrogravitics Systems*, Integrity Research Institute, 2001, pp. 92-96.

Negative mass may or may not exist. If it does, the according to both Newtonian mechanics and Einstein's general theory of relativity, it behaves in a most astonishing manner. For example, by the principle of equivalence the ratio of gravitational to inertial mass must be positive for all mass. Therefore, as is well known, positive mass attracts negative as well as positive mass, while negative mass repels both types of mass. Consequently, if a mass is placed near a mass -m, the two move in the same direction with ever-increasing speed, the negative mass chasing the positive. At first this seems to contradict the law of conservation of energy. But the particle of negative mass acquires negative energy as its speed increases, and the total energy of the two particles remains constant.

We propose here to take the idea of negative mass seriously, a major reason for doing so being the desperate theoretical situation into which physics has been thrust by the anomalous behavior of the recently-discovered quasi-stellar radio sources.[1] The idea of negative

---

* Now called "quasars" — Editor

mass is extremely natural in the general theory of relativity. Indeed, one can exclude negative mass from Einstein's theory only by an ad hoc assumption extraneous to the theory.

According to Einstein's theory, gravitational waves are theoretically possible. It may well be that they are not generated by bodies in free fall; but if they exist they should be generated when matter is strongly influenced by non-gravitational forces. In the special cases that have been studied[2], these waves carry away energy and cause a corresponding diminution in the mass of the radiating body. But there is a peculiar asymmetry about the energy transported by the gravitational waves: the energy is positive whether the mass of the source is positive or negative. Since this apparently arises from the Minkowskian signature of space-time it would seem to be of a fundamental nature. It has significant consequences. For unlike electromagnetic waves, which do not transport charge though their source is charge, gravitational waves are produced by mass and transport mass (in the form of energy). So if a body of mass m gives off gravitational waves of energy $c^2 \Delta m$, its mass is reduced to $m - \Delta m$, but if the mass of the emitter is $-m$ it becomes $-(m + \Delta m)$, which is a greater amount of negative mass than before.

What happens to particles of negative mass that escape? They are unlikely to be present in interstellar space insufficient amounts to affect significantly our estimates of the average density of the universe. Since they repel all matter, they cannot form negative-mass stars. If

95

---

the universe is such that negative-mass particles can, on balance, "escape to infinity" there will be an effect of continual creation of positive energy in the observed region.

(Comment: Regarding "on balance", see Eq. 1 above. D.C.)
